ResearchGate

See discussions, stats, and author profiles for this publication at: https://www.researchgate.net/publication/261144903

IS IT TIME FOR DIGITAL HYDRAULICS?

Conference Paper · May 2003

CITATIONS
76

READS
4,096

3 authors, including:

Matti Linjama
Tampere University
136 PUBLICATIONS **1,670** CITATIONS

SEE PROFILE

Arto Laamanen
Hydac Oy
10 PUBLICATIONS **190** CITATIONS

SEE PROFILE

All content following this page was uploaded by Matti Linjama on 28 March 2014.

The user has requested enhancement of the downloaded file.

IS IT TIME FOR DIGITAL HYDRAULICS?

Academy Research Fellow Matti Linjama,
M. Sc. Arto Laamanen and Professor Matti Vilenius
Tampere University of Technology
Institute of Hydraulics and Automation
P.O. Box 589
33101 Tampere, Finland
Phone +358 3 3115 2690, Fax +358 3 3115 2240
E-mail: matti.linjama@tut.fi

ABSTRACT

This paper discusses the possibility to use low-cost on/off valves instead of servo valves even in demanding servo applications. Different on/off control techniques are first reviewed and analyzed. Then the basic principles of suggested Digital Hydraulics technology are introduced and some tracking control results are presented. Results show that energy efficient and high-quality position and velocity control is possible with simple and low-cost on/off valves. Thus, the Digital Hydraulics is potential alternative for traditional servo systems. Predicted cost level is also lower especially in water hydraulic applications. The challenges and targets for development are discussed and highlighted.

KEYWORDS: on/off control, digital hydraulics

1 INTRODUCTION

Demanding motion control problems of fluid power systems are usually solved by using high-bandwidth servo or proportional valves. These valves give good controllability but they have several problems, such as cavitation, high power losses, contamination sensitivity and high price. The cavitation avoidance and good efficiency call for separate meter-in meter-out control that is impossible with standard spool type valves unless two valves are used for each actuator. An exception is Ultronics valve that has two spools [1].

On/off valves have several benefits over servo and proportional valves: they are inexpensive, reliable, insensitive for contamination and possibly zero leak. The control electronics is also simpler and easy to connect with computers. However, the on/off control is associated with many negative features such as noise, pressure peaks, jerky

motion and poor controllability. Most of the on/off control research has concentrated on the high-frequency modulation of valve. The most popular approach is Pulse Width Modulation (PWM) and good controllability can be achieved if the carrier frequency is high enough. This requires extreme durability (>10^9 cycles) and response time (<1 ms) of the valve, and lot of research has been made to develop such valves [2, 3, 4]. High-frequency switching of large valves seems to be a difficult problem and requires special energy storage elements.

This paper studies a different way to realize high-quality motion control without fast valves or continuous switching. The basic approach is to connect several on/off valves in parallel to form a Digital Flow Control Unit (DFCU), which is the analogue of a DA-converter. This approach, termed as Digital Hydraulics, needs more valves, but valves can be simpler and slower response. The approach gives also unique benefits – good motion control with slow-response valves, improved redundancy and reduced durability requirement – when compared to PWM method.

Section 2 reviews different on/off control methods and Section 3 compares them using a simple simulation model. Section 4 presents the basic concepts of the Digital Hydraulics and analyses steady-state characteristics of a digital hydraulic cylinder drive. Section 5 shows some experimental tracking control results, which show that servo-quality position tracking is possible even with slow-response valves. Section 6 discusses benefits and challenges of Digital Hydraulics and Section 7 gives conclusions.

2 DIFFERENT WAYS TO REALISE MOTION CONTROL WITH ON/OFF VALVES

2.1 Bang-Bang Control

The simplest on/off control strategy is to open the valve and then close it just before the target position. Advantages of this “bang-bang” control are simple control algorithm and minimum number of valve operations. Well-known drawbacks are poor accuracy, limit cycles, low maximum velocity as well as tendency to pressure peaks and cavitation during the stopping.

McCloy [5] analyzed cavitation occurrence in bang-bang controlled systems dominated by the inertial load. He concluded that cavitation never occurs when the motion starts but it can occur in the stopping situation or when the direction of movement is changed. An important observation was that cavitation occurrence depends strongly on piston position. Baeck [6] applied the bang-bang control to the hydraulic steering system of an amphibious vehicle. The relationship between the deadzone region of the controller and limit cycles was analyzed using describing function method. Position accuracy was limited by 50 ms delay of the valve and one degree accuracy was achieved.

More recently, Linjama et al. [7, 8] studied the bang-bang position control of a low-pressure water hydraulic cylinder using low-cost directly operated solenoid valves. The motivation for this research was high costs of water hydraulic servo valves. The basic three-state bang-bang controller was studied in [7] with different load masses, piston positions and stroke lengths. The maximum velocity of 70 mm/s together with 0.4 mm

positioning accuracy was achieved but the maximum pressure peak exceeded the supply pressure by 43 percent with maximum load. The worst-case pressure peaks were reduced below the supply pressure by adding small 'hose accumulators' (pieces of hose with small orifice) into the system. However, the effect of load force was not studied in this paper. A two-stage bang-bang control was studied in [8]. The low velocity movement was implemented by four solenoid valves as in [7] and a large four-way valve was connected in parallel with small valves. Experimental results showed maximum velocity up to 400 mm/s and 0.3 mm position accuracy despite variations in the load force. Thus, the combination of high velocity and good accuracy under varying loading accuracy is possible with bang-bang control but requires additional valve(s).

2.2 Modulation of single valve

Lot of research has been made to overcome drawbacks of the bang-bang control without any additional valves. The basic approach is to modify valve control such that controllability improves and pressure transients reduce. The time optimal control has been studied e.g. by Amstrong and McCloy [9]. The objectives of the time optimal control are to minimize the movement time and terminal oscillations. This yields several valve operations during the stopping phase and can be seen as a modulation method. More popular modulation method is Pulse Width Modulation (PWM) and its variants, which have been studied actively since 1960's. The PWM method is based on the high frequency and continuous switching of the valve between open and close positions. The mean flow is determined by the ratio between open and close periods of the valve. An early example of PWM control is acceleration switching servo valve, which is a normal flapper-nozzle type, but the flapper is controlled between extreme positions using PWM [10].

The main problem of the PWM control is that very high frequency switching is required to achieve smooth control, which sets extreme requirements for valve response time and durability. Response time requirements can be relaxed by using differential PWM control in which the flow is determined by the differential of two pulses [11], but in any case PWM methods require high-frequency switching of valves. This is why PWM and similar methods are seldom applied in real systems despite of encouraging results in laboratories. Demanding requirements can be achieved currently with small valves and/or pressure levels. An example of this kind of system is pilot control of a mobile proportional valve [12]. This valve is shown in Figure 1 and PWM control is well suited for this application because the required flow and pressure are small.

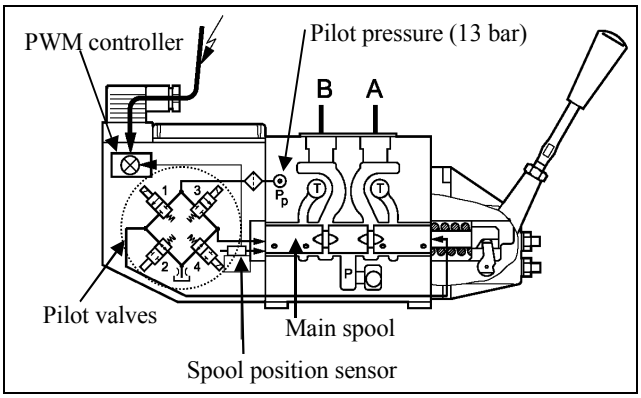

Figure 1. Proportional valve with PWM pilot control [12].

2.3 Serial Connection

A quite new and unknown on/off control method is to utilize series connection of valves. The basic implementation of this digital small stepping method is two two-way valves connected in series by a hydraulic capacitance (e.g. piece of hose). Stepwise motion is achieved by first charging the capacitance from the supply and then releasing it to the cylinder chamber. This is like a hydraulic stepping motor and can be used to improve positioning accuracy. An important advantage of this approach is that the steady-state position error is completely independent on the response time or size of valves. Weak point is that maximum average velocity is limited.

Kato and Oshima [13] introduced the concept of the digital small stepping method and studied the effect pressure difference, volume size, oil temperature and cycle frequency on the step size. Linjama et al. [14] extended the method by installing volumes both in the supply and return lines of the system and by combining it with a traditional bang-bang control system. The hydraulic circuit of the system is shown in Figure 2 where valves PA, AT, PB and BT form a standard bang-bang positioning circuit, and valves P and T are added to implement the digital small stepping method. Experimental results showed 0.1 mm positioning accuracy with different stroke lengths and load forces. The system was further developed in [15] where an adaptive controller was developed to reduce the settling time of the response. Figure 3 shows some 1 mm step responses with the adaptive controller.

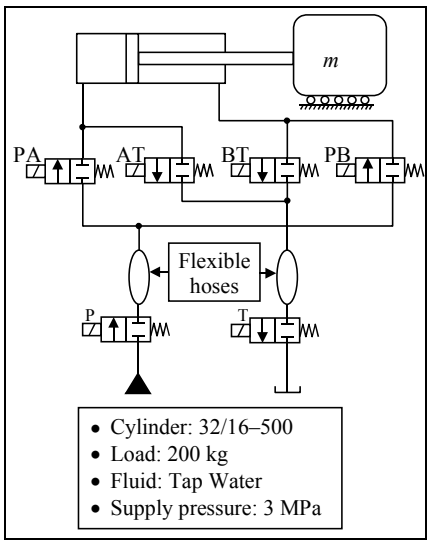

Figure 2. Combined digital small stepping and bang-bang system [14, 15]

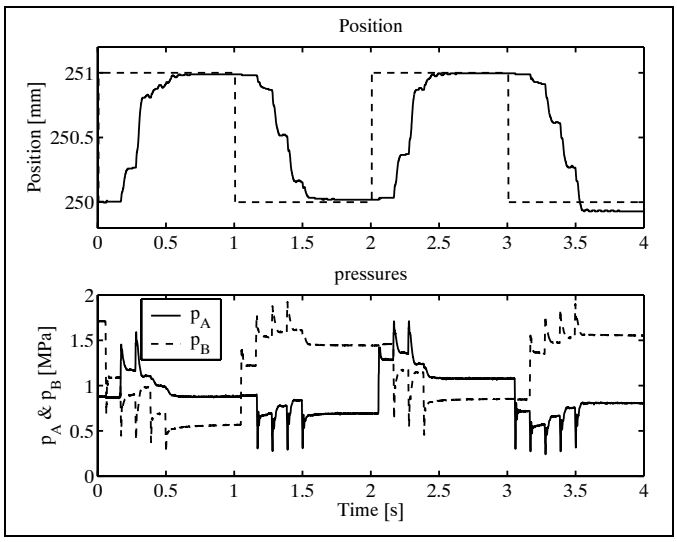

Figure 3. Sample results with adaptive digital small stepping method [15].

2.4 Parallel connection

An old idea to improve basic bang-bang control is to connect several valves in parallel. This gives stepwise controllable velocity that yields higher maximum velocity, smaller pressure transients and better accuracy. The simplest approach is to connect equally sized valves in parallel, so called Pulse Number Modulation (PNM) method. The number of different velocities is equal to the number of valves and a large number of valves is needed for good controllability. On the other hand, valve response time is not

critical because there is no need to close one valve and open another simultaneously. Another approach is Pulse Code Modulation (PCM) in which valve sizes are in ratios of 1:2:4:8:16 etc. This allows stepwise flow control with 2^n-1 steps where n is the number of parallel-connected valves. Thus, an excellent flow control can be achieved with a small number of valves: e.g. seven valves give 127 flow steps and controllability of a servovalve, at least in theory. One problem of the PCM method is that several valves are operated simultaneously, which requires accurate timing of individual valves. A newly developed approach between PNM and PCM methods is coding based on Fibonacci numbers in which valve sizes are 1:1:2:3:5:8:13 etc. [16]. The advantage of this method is that the same flow rate is achieved with different combinations of valve openings, which increases redundancy and allows optimization of valve operations; see [16] for details.

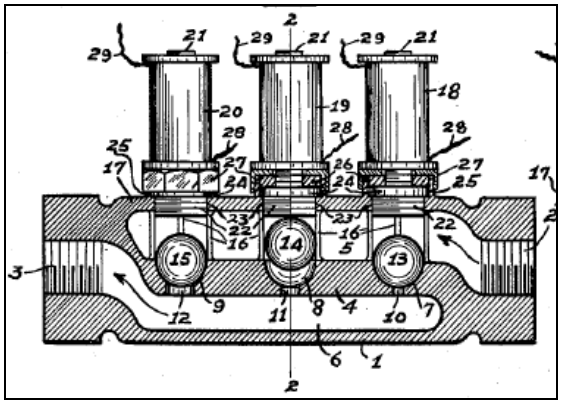

Figure 4. Rickenberg's flow control valve in 1930 [17].

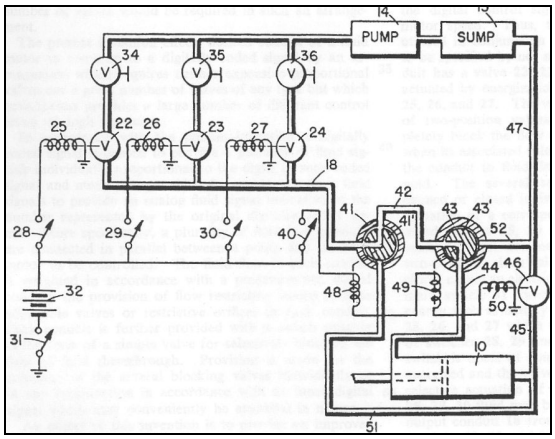

Figure 5. Bower's PCM control valve system in 1961 [18].

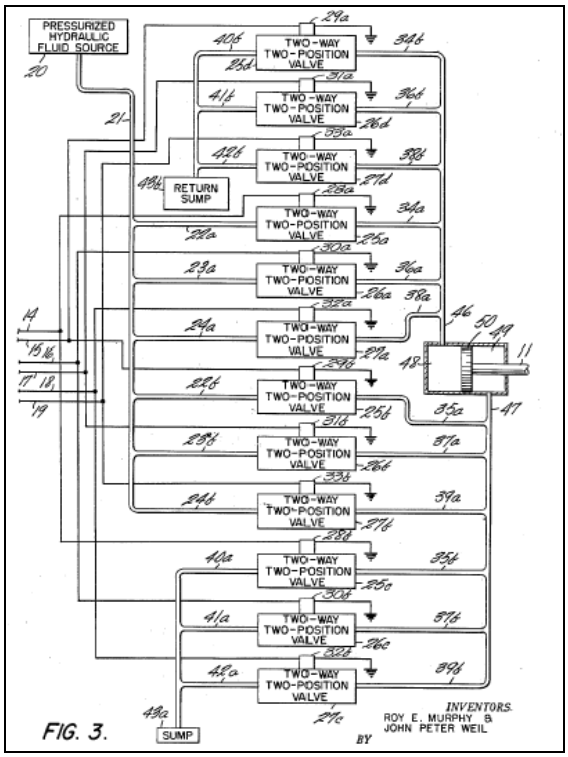

Figure 6. PCM system of Murhpy and Weil in 1962 [19].

Probably the earliest reference to flow control with parallel-connected valves is Rickenberg's patent in 1930 [17]. His valve system is shown in Figure 4 and consists of three solenoid valves each having different flow capacity. This system is not a true PCM system because the control system commands only one valve to open in turn. Bower's patent in 1961 [18] introduces the true PCM control with double-acting actuator. As shown in Figure 5, the system consists of one valve series in the pressure side and valves for chancing direction of movement. The most general PCM valve system has

been presented by Murphy and Weil in 1962 [19]. As shown in Figure 6, all flow paths have its own valve series allowing separate meter-in meter-out flow control.

Although the PCM method and its variants have been under active patenting, only few research publications can be found in the literature. Virvalo [20] used the PCM method to control the velocity of an oil hydraulic cylinder. One valve series with four valves was installed in the outflow path of the cylinder in order to synchronize piston velocity with trolley conveyor. Similar meter-out control with one valve series was used by Liu et al. [21] and Laamanen et al. [22]. Liu et al. [21] controlled the position of the joint actuator of a spraying robot and experiments showed 0.3 mm position accuracy. The selection of the dead zone and sampling time was discussed and it was suggested that some larger valves might be removed from the valve series, e.g. use valve series 1:2:4:16. Laamanen et al. [22] controlled the velocity of a water hydraulic motor using seven on/off valves. Control performance with the PCM method and commercial proportional flow control valve were compared and conclusion was that PCM method gives better stability and accuracy as well as lower costs. Linjama et al. [23] used five valves both in the inflow and outflow paths of a heavily loaded water hydraulic cylinder. This allowed separate meter-in meter-out control and simultaneous velocity and pressure control. Experimental results showed tracking performance close to water hydraulic servosystems and simultaneous pressure level control. This system is discussed in more detail in Section 5.

PCM valve systems are more popular in pneumatics than in hydraulics [24, 25] and at least one commercial pneumatic PCM valve exists [26]. This Matrix valve consists of six or eight two-way valves packed in a compact 55 mm cube. The eight-valve version gives resolution of 1:256 being better than most servo valves, and the response time is below 1 ms for all amplitudes, according to manufacturer. However, the maximum flow is quite small, 72 Nl/(min*bar). Miyata et al. [24] used the PCM method to control the position and pressure of a pneumatic cylinder drive. They used four valve series according to Murphy's patent to independently control the inflow and outflow of cylinder chambers. Ferraresi [25] studied the early version of the Matrix valve [26] and developed the combined PCM-PWM control method. The idea behind the PCM-PWM control is to control the smallest valve with the PWM method to remove discontinuity of the pure PCM method. This is an interesting and well-motivated idea because it is easier to satisfy performance and durability demands of the PWM control with small valves.

3 COMPARISON OF DIFFERENT ON/OFF CONTROL METHODS

3.1 Introduction

A simple hydraulic system shown in Figure 7 is simulated to demonstrate the characteristics of different control methods. The system consists of the constant pressure source, single acting cylinder, load mass and control valves. Control valves for bang-bang, PWM, digital small stepping and PCM systems are shown in Figures 7 (a), (b), (c) and (d), respectively. Valves are assumed ideal and the system parameters are:

B = 1200 MPa	Effective bulk modulus	m = 100 kg	Load mass
b = 2000 Ns/m	Viscous friction coeff.	p_S= 6 Mpa	Supply pressure
d = 20 mm	Piston diameter	V_d=10 cm^3	Dead volume between valves and cylinder

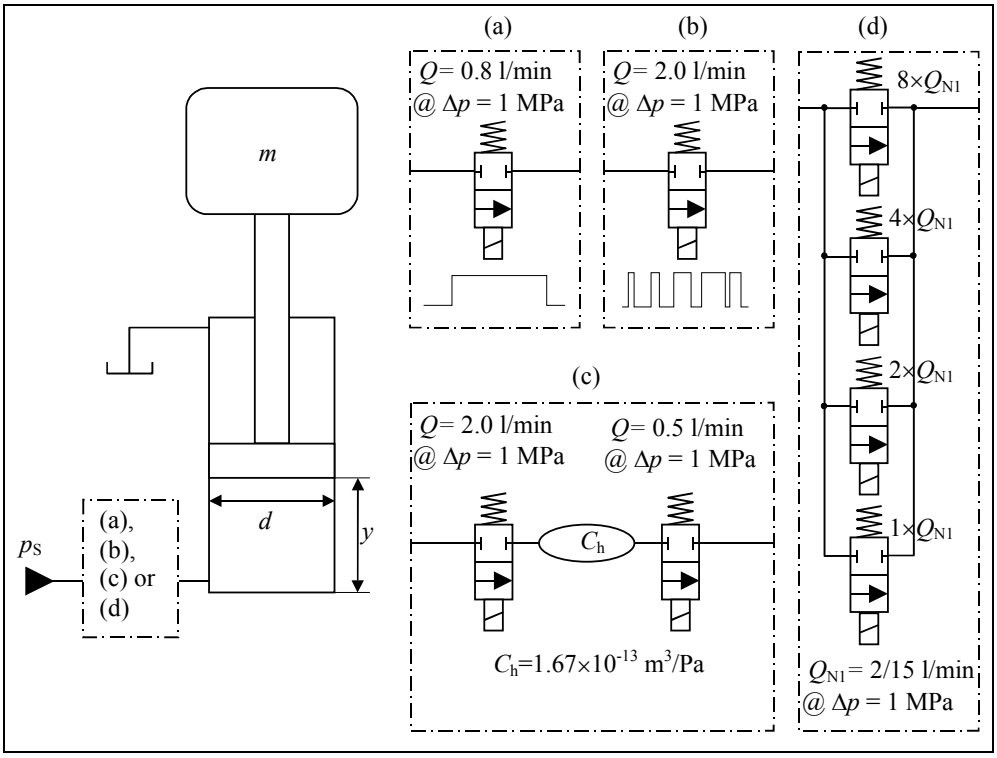

Figure 7. Hydraulic circuits of studied on/off control systems.

3.2 Response with Bang-Bang Controller

Figure 8 shows the simulated step response of the system with the bang-bang controller. The valve nominal flow is 0.8 l/min @ Δp = 1 MPa. Drawbacks of the pure bang-bang approach – low maximum velocity and strong pressure oscillations – are clearly seen. On the other hand, valve opens and closes only once and no high-frequency switching of valves is required. Thus, non-ideal valves can be used with bang-bang approach, but the valve closing delay and its variation affects the position accuracy.

3.3 Response with PWM-Controller

Figure 9 presents the step response with the PWM controller and 50 Hz carrier frequency. The minimum pulse width is limited to 1 ms and the valve nominal flow is 2 l/min @ Δp = 1 MPa. Position and velocity responses are smoother than with the bang-bang controller, but severe pressure transients exist during the braking period because of strongly discontinuous control. Seven valve operations are required in this case for this movement, but carrier frequency should be higher in order to achieve satisfactory pressure response. The valve must also be extremely fast, response time around 1 ms, for successful PWM control.

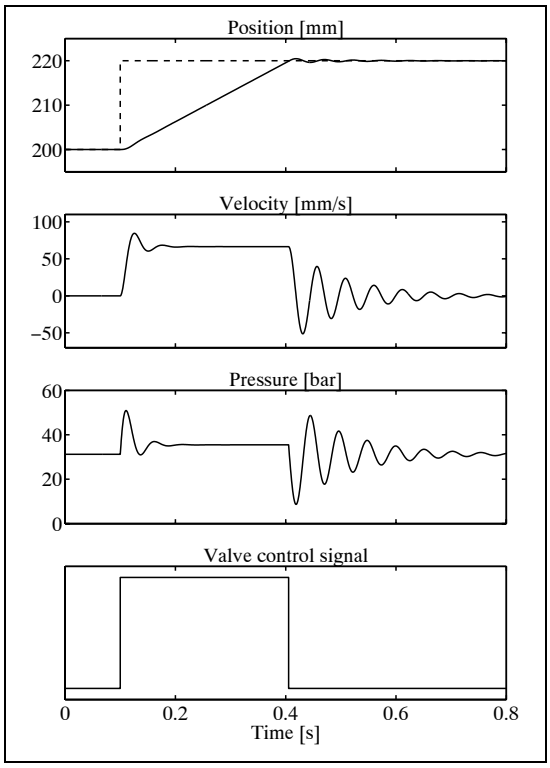

Figure 8. Simulated 20 mm step response with bang-bang controller.

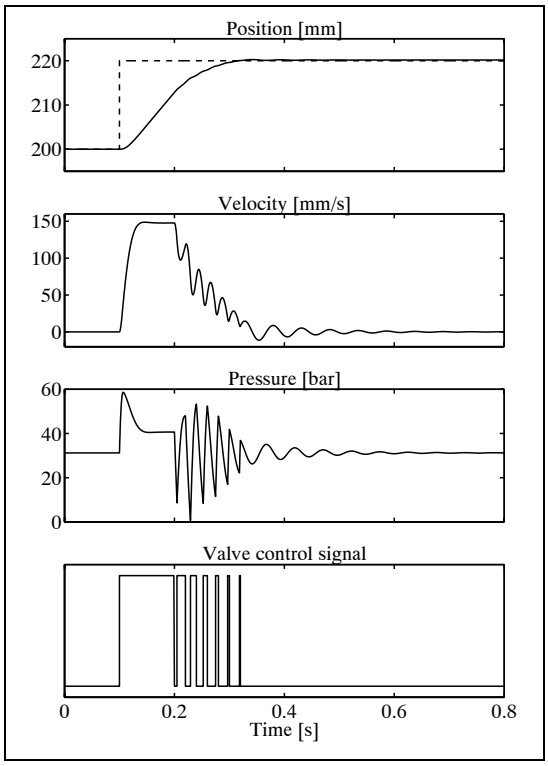

Figure 9. Simulated 20 mm step response with PWM-controller.

3.4 Response with Digital Small Stepping Method

Figure 10 depicts the step response with the digital small stepping system of Figure 7 (c). The "stepping motor" behavior of the method is clearly seen in the position response. It is also seen that the method is not suitable for long movements as the average velocity is limited. Fast movements call for big step size (large hydraulic capacitance), which increases pressure pulsation. However, the method can be combined with other methods and used for highly accurate final positioning. An important advantage is also that there are hardly any requirements for the valve response time. The digital small stepping can be implemented with slow valves and valve delays have effect only on the maximum stepping frequency.

3.5 Response with PCM Valve System

Figure 11 shows the step response with the PCM valve system of Figure 7 (d). The sampling time of the controller is 30 ms, which means maximum switching frequency of 17 Hz. The system has now fifteen different velocity levels and the system behavior is more proportional. Velocity and pressure oscillations are small and the movement is smooth. It is important to note that the PCM method does *not* require fast valves but it requires small variation in valve delays. The valve delay increases the loop delay and its effect is small if the delay is small compared to the system dynamics. However, the variation in the valve delay is important factor because valves are opened and closed simultaneously. The PCM method sets no limits for the maximum velocity because the velocity can be doubled with one additional valve. The cost paid for better controllability is increased number of valves.

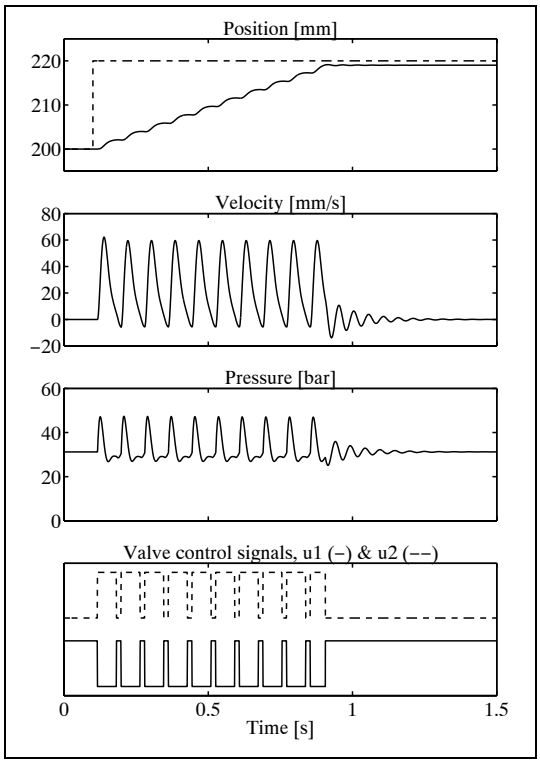

Figure 10. Simulated 20 mm step response with digital small stepping method.

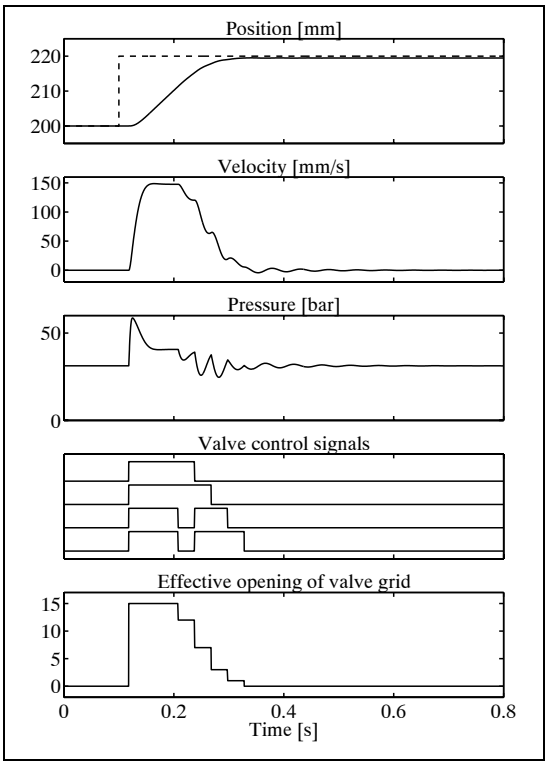

Figure 11. Simulated 20 mm step response with PCM valve system.

3.6 Summary

Table 1 presents a rough comparison between bang-bang, PWM and PCM control methods. The digital small stepping method is not included because it is not alone suitable for implementing general on/off positioning.

Table 1. Comparison of on/off control methods.

	Bang-bang	PWM	PCM
Maximum velocity	0	+	++
Smoothness of motion	0	+	++
Valve response time and its variation	++	0	+
Valve durability	++	0	+
Number of valves	++	++	0
TOTAL	++++++	++++	++++++

The comparison shows that the PCM control is superior to the more popular PWM method if the increased number of valves can be tolerated. It is important to note that the increased number of valves does not necessarily mean increased costs because much simpler slower-response valves can be used with the PCM method. The bang-bang control is also good solution according to this comparison, but it can be used only in the applications where maximum velocity and smoothness of motion are not important. PWM method suffers from demanding valve requirements but is a good solution if ultra-fast-response and reliable valves can be developed.

4 DIGITAL HYDRAULICS

4.1 Definition

By "Digital Hydraulics" we mean systems having following features:

(a) All control valves are on/off type.
(b) Performance is equal to traditional proportional and servo systems.
(c) Separate meter-in meter-out control for optimal energy utilization and cavitation avoidance.
(d) Flexible and programmable controller, which utilizes at least the basic information of the controlled system (piston areas, load forces etc.)
(e) Redundant circuits such that the system works (possibly with degraded performance) even if some valve is out of order.

Note that only valves are digital or on/off type but all other hydraulic components are normal. Thus, Digital Hydraulics does not mean here digital actuators, digital pumps or fluidics [27]. Properties (a) and (b) mean that on/off valves replace servo and proportional valves without any loss in control performance. Property (c) is clear improvement to traditional systems because almost all proportional valves are single spool type with fixed inflow/outflow ratio. Property (d) differs from the traditional proportional system design in which e.g. piston areas are considered in the selection of the valve and spool. Separate meter-in meter-out control makes it possible to adjust the valve to the system by software, which reduces the number of required valve versions and makes it possible to adapt different loading conditions. Property (e) is a unique feature of Digital Hydraulics and is thanks to the fact that several simple valves are used instead of a complicated servo or proportional valve.

4.2 Digital Flow Control Unit, the Key Component of Digital Hydraulics

The key component of the Digital Hydraulics is the Digital Flow Control Unit (DFCU), which is a number of two-way on/off valves connected in parallel. Figure 12 shows a DFCU and its suggested drawing symbol. The broken line is used to denote almost proportional flow control of the unit and variable n determines the number of valves of the unit. There are many different ways to select flow capacities of individual valves but only three are considered here:

(a) Flow capacities of all valves are equal (Pulse Number Modulation, PNM).
(b) Flow capacities are according to binary series, 1:2:4:8 etc. (Pulse Code Modulation, PCM).
(c) Flow capacities are according to Fibonacci numbers, 1:1:2:3:5:8:13 etc. [16].

These all yield a stepwise flow curve where the step size is constant as shown in Figure 12. The number of nonzero flow rates is n for equally sized valves, 2^n-1 for binary coding and $\sum_{i=1}^{n}\left\{\Phi^i - (-\Phi)^{-i}\right\}/\sqrt{5}$ for Fibonacci coding where $\Phi = \left(1+\sqrt{5}\right)/2$. A DFCU with n_{steps} different flow rates can be characterized as follows (see Figure 12):

- Treshold and nonlinearity $50/n_{steps}$ %
- Ratio between maximum and minimum flow = n_{steps}
- No hysteresis or zero point drift

- Absolute repeatability
- Response time independent on amplitude and equal to the response time of individual valves

If the number of different flow rates is about 200, the DFCU gives same controllability as good servovalve. This is achieved with 200 equally sized valves, 11 valves with Fibonacci coding or 8 valves with binary coding.

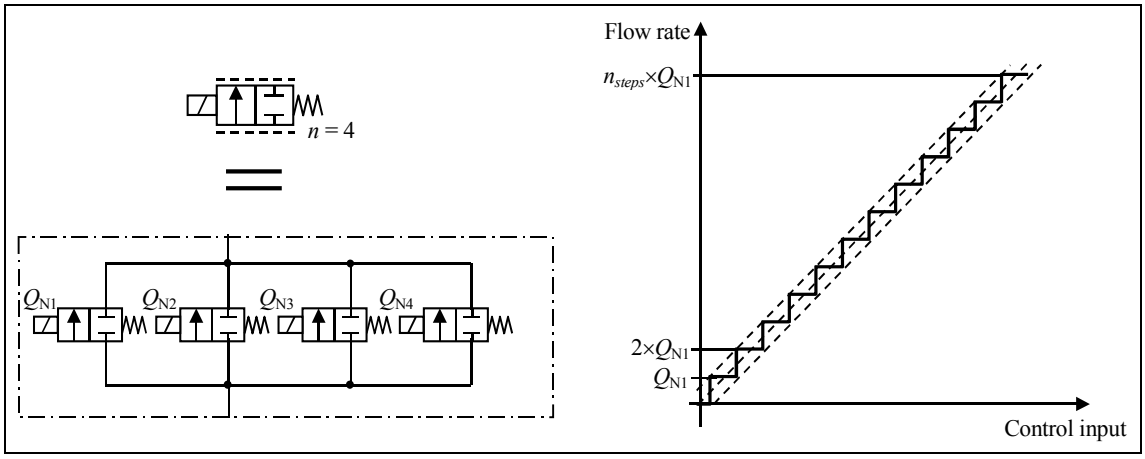

Figure 12. Drawing symbol and flow characteristics of DFCU.

4.3 Digital Hydraulic Four-Way Valve

Figure 13 depicts three possible ways to implement proportional four-way valve with DFCUs. Version (a) uses four DFCUs and is the most general case. It gives the most versatile controllability because it is possible to control flows P→A, P→B, A→T and B→T independently and simultaneously. The advantage of version (a) is also that only unidirectional valves are needed. Version (b) uses a separate four-way on/off valve for changing the direction of the movement and only two flow control units are needed. Drawbacks of this approach are that a large four-way valve is needed and that two-way valves must be bi-directional. The order of the four-way valve and DFCUs is reversed in version (c), which allows the use of unidirectional DFCUs. However, the leakage of the four-way valve may cause problems in this solution.

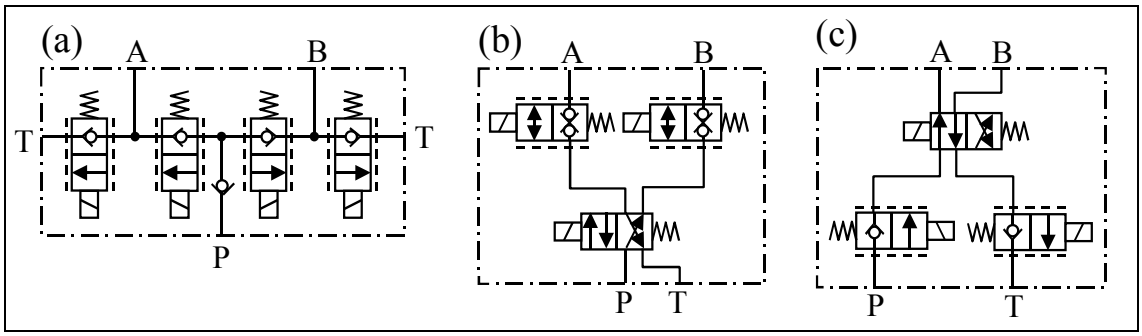

Figure 13. Some possibilities to implement digital hydraulic four-way valve.

4.4 Steady-State Characteristics of Digital Hydraulic Cylinder Drive [23]

A digital hydraulic system of Figure 14 is studied next to demonstrate the steady-state characteristics of digital hydraulic cylinder drives. Only the extending direction of the motion is studied with following assumptions:

- DFCUs are identical and follow exactly the binary series.
- Pressure losses in the four-way valve and couplings are negligible.

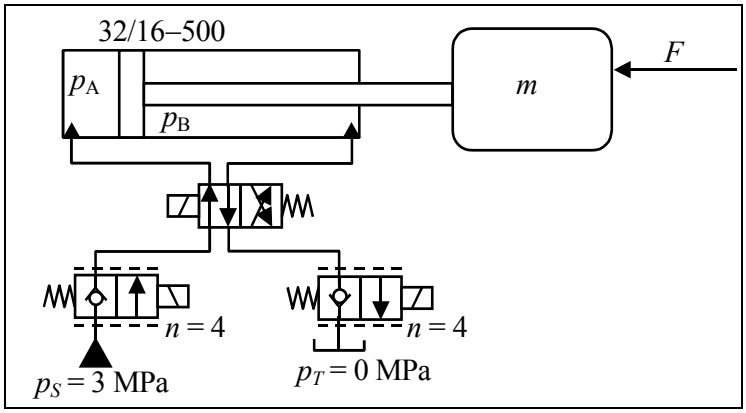

Figure 14. Digital hydraulic cylinder drive.

Let Q_{N1} denote the flow capacity of the smallest valve of DFCUs with one Pa pressure differential and u_P and u_T denote the state of flow control units. The number of nonzero flow rates is fifteen for each DFCU and the steady-state equations for the extending direction are:

$$\begin{cases} Q_P = u_P Q_{N1}\sqrt{p_S - p_A} = A_A v \\ Q_T = u_T Q_{N1}\sqrt{p_B} = A_B v \\ F = p_A A_A - p_B A_B \end{cases} \Rightarrow \begin{cases} p_A = \dfrac{z^2 p_S + \gamma^2 F / A_B}{z^2 + \gamma^3} \\ p_B = \dfrac{\gamma z^2 p_S - z^2 F / A_B}{z^2 + \gamma^3} \\ v = \dfrac{u_P Q_{N,P1}}{A_B}\sqrt{\dfrac{\gamma p_S - F / A_B}{z^2 + \gamma^3}} \\ \gamma = A_A / A_B \quad , \quad z = u_P / u_T \end{cases} \tag{1}$$

The system has in total 15×15 = 225 different u_P–u_T combinations giving nonzero velocity. The first plot of Figure 15 depicts these velocities for the extending direction with following parameters: cylinder diameter 32 mm, rod diameter 16 mm, supply pressure 3 MPa, F = 0 N, Q_{N1}= 1×10^{-8} m^3/(s√Pa). It can be seen that almost the same velocity can be achieved with several combinations. For example, velocity of 0.15 m/s can be achieved within two percent accuracy with five different u_P–u_T combinations as shown with dots in the first plot of Figure 15. The second plot of Figure 15 presents corresponding steady-state pressure at A-chamber. The state combinations giving almost the same velocity have different steady-state pressure, which means that almost independent velocity and pressure control is possible. The third plot of Figure 15 depicts steady-state velocities in order of size. This plot shows that the velocity resolution is much better than the flow resolution of individual DFCUs, especially at higher velocities.

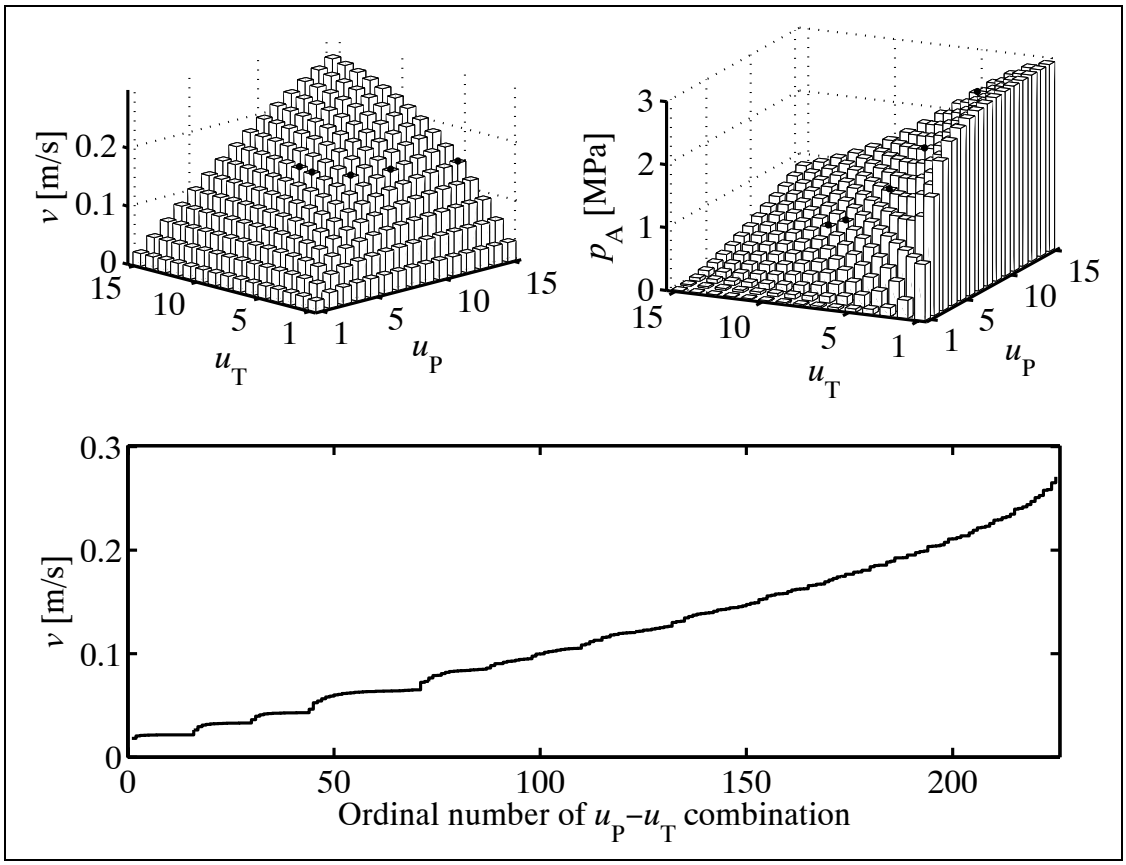

Figure 15. Steady-state velocity and pressure as a function of states of DFCUs.

5 TRACKING CONTROL OF WATER HYDRAULIC CYLINDER USING DIGITAL HYDRAULICS

As an example of current status of Digital Hydraulics, the some tracking control results of [23] are repeated here. The hydraulic circuit of the test system is depicted in Figure 16. It consists of a water hydraulic pump unit, two digital flow control units, a four-way valve and asymmetric cylinder with inertial load.

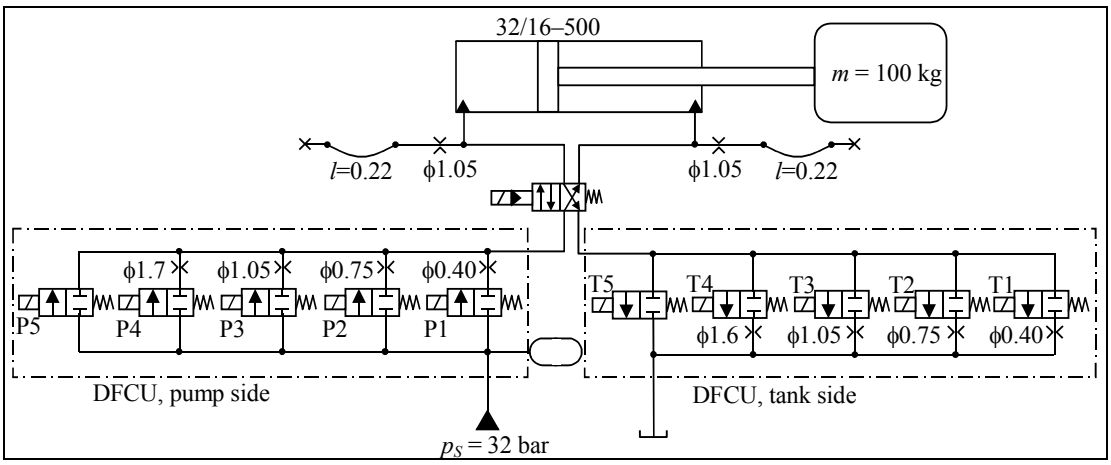

Figure 16. Hydraulic circuit of digital hydraulic tracking control system [23].

Each flow control unit consists of five directly operated solenoid valves. The largest valve is without external orifice and other valves have an orifice such that the flow ratios follow approximately the binary series. These valves have been studied in [28] and the measured opening delay varies between 20 and 30 ms, and closing delay between 5–15 ms. Thus, the valves are not fast at all and the variation in the delay is big. The four-way valve is a commercial spool-type pneumatic valve that is suitable also for short-term low-pressure water hydraulic use. The system is equipped also with 220 mm 'hose accumulators' to reduce pressure transients. The controller utilizes the calculated steady-state velocities and pressures of all u_P–u_T combinations and selects the combination that gives small velocity error, small change in the pressure level and downstream pressure close to the target value (see [23] for details). The sampling time of the controller is 30 ms and the position reference is fifth order polynomial with 200 mm stroke and 1.5 s movement time.

Figure 17 shows an example of simultaneous position and pressure tracking. Maximum position tracking error is about 2 mm and the maximum velocity is 250 mm/s. This is of the same level as results achieved with water hydraulic servo valves [29]. There are some pressure peaks caused by random delays of valves and in this sense the quality of tracking is not as good as with servo valves. However, these results show that good position tracking control and simultaneous pressure level control is possible even with low-cost and non-ideal valves.

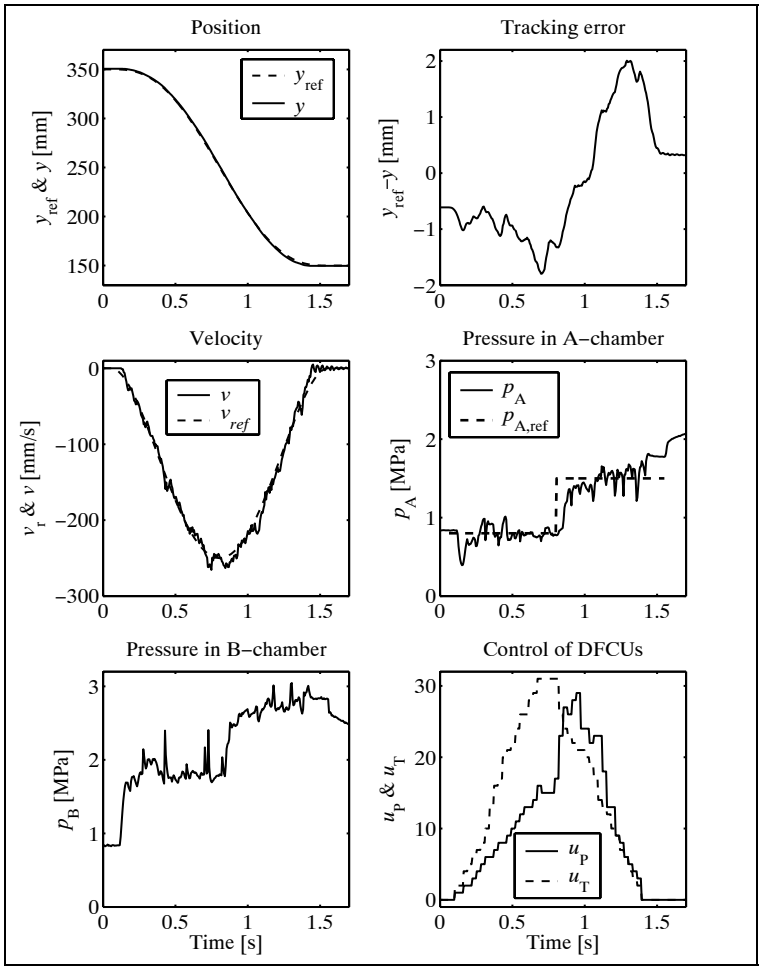

Figure 17. Position tracking control result.

6 BENEFITS AND CHALLENGES OF DIGITAL HYDRAULICS

6.1 Benefits of Digital Hydraulics

Many benefits of the Digital Hydraulics technology come from the fact that on/off valves are used instead of servo or proportional valves. Such benefits are:

(a) Simpler and less expensive valves
(b) Simpler control electronics
(c) Easy connection with computers and PLCs
(d) Higher reliability
(e) Less sensitive for contamination
(f) No need for spool position feedback
(g) No leak if seat type valves are used

Digital Hydraulics as defined in this paper offers several additional benefits, which are not generally true for on/off controlled systems:

(a) Good efficiency because of separate meter-in meter-out control
(b) Good controllability without fast valves or high-frequency switching
(c) Redundancy such that the system works even if some valves are out of order

Thus, the Digital Hydraulics has potential for cheaper, more reliable and more energy-effective hydraulics, but there are some challenges to be solved before that.

6.2 Challenges of Digital Hydraulics

6.2.1 Compact DFCUs

Important challenge of Digital Hydraulics is the size of the whole on/off valve system when compared to proportional or servo valves. Although single on/off valve is much smaller than proportional valve with same capacity, the situation can be opposite when the digital hydraulic valve system with 10–20 on/off valves is implemented. Probably the most compact valve type in the market is cartridge type screw-in valve. Figure 18 shows such valve for flows below 60 l/min. Figure 19 shows a manifold with two DFCUs each having six valves. The maximum flow of the DFCU is 118 l/min if the binary coding is used and a digital hydraulic four-way valve would require two manifolds or an additional four-way on/off valve. As a comparison, a two-stage industrial proportional valve has dimensions about 70×150×250 mm and weight 8–10 kg. Thus, current manifold technology yields 2–3 times bigger and heavier valves and does not offer a competitive solution for Digital Hydraulics. Single valve is rather compact and light but the compact manifold is difficult or even impossible to design.

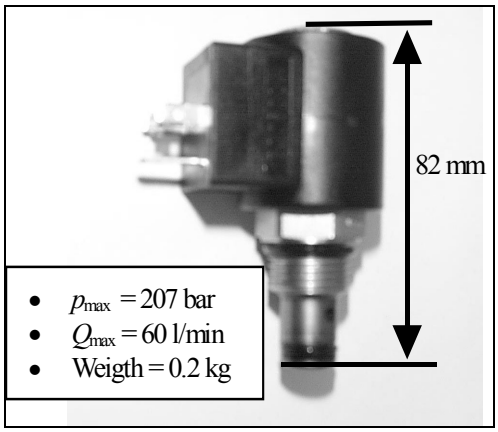

Figure 18. Two-way screw-in cartridge valve.

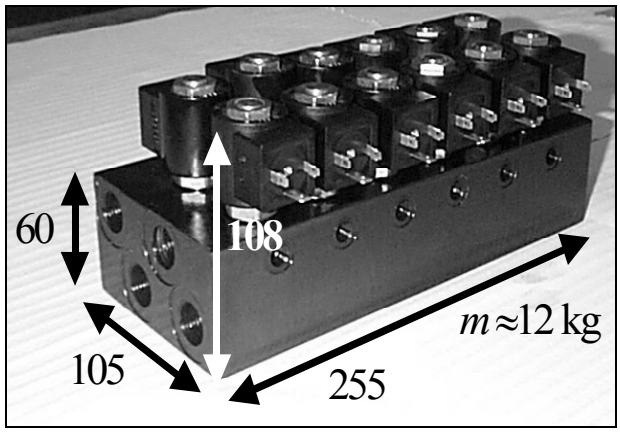

Figure 19. Double DFCU implemented by screw-in cartridge valves.

There are at least two alternatives for development of compact DFCUs. The first one is to redesign existing valves for optimal parallel connectivity. An example of this approach is pneumatic Matrix valve [26], which is much more compact than eight separate solenoid valves with manifold. Another approach is micro valve technology based on e.g. silicon etching technology. Successful development of hydraulic micro valve would make it possible to develop compact DFCUs with a huge number of identical valves. This kind of valve would offer fast response and excellent redundancy. Again, the development is already running in pneumatics but not in hydraulics [30].

6.2.2 Total Costs

Is Digital Hydraulics cost effective solution? The answer to this difficult question depends strongly in application. The answer is surely yes in water hydraulics because water hydraulic servo and proportional valves are so expensive. Two-way solenoid valves, which were used in Section 5, offer cost effective solution for lower pressures (below 50 bar) and flow rates (below 20 l/min). A rough price estimate for digital hydraulic valve systems can be calculated by assuming that total costs including manifolds and control electronics are twice the price of valves. Therefore, the price estimate for the digital hydraulic four-way valve of Figure 13 (a) is 1200 € (2 × 20 valves × 30 €/valve), which is only a fraction of the price of the water hydraulic proportional valve (>5000 €).

The situation in the oil hydraulics is not so clear. A price estimate for the valve system of Figure 19 with a four-way valve is about 2000 € that is at the same level as the price of the pilot operated proportional valve with spool position feedback and integrated electronics. Therefore, the current on/off valve technology gives little, if any, cost reduction in oil hydraulics. This is understandable because there is no mass production of digital hydraulic valves.

6.2.3 Noise and Pressure Peaks

The switching noise of on/off valves is closely related to the response time of the valve. Fast valves produce more noise because of faster armature movement and higher impact energies. It can be expected that the noise level of Digital Hydraulics is lower than with PWM control because it does not require fast valves and because valves are switched only when velocity changes.

Pressure peaks are harmful because they cause noise and may damage the system. Jerky motion is seldom accepted in real applications. If the variation in switching delays of valves is small, Digital Hydraulics gives smooth movement as simulation results of Section 3 show. On the other hand, experimental results of Section 5 show that pressure peaks exist if the variation of valve delays is big. There are several ways to improve smoothness of motion. The obvious way is to use valves with small variation in delays. Another is to include the probability of pressure peak in the controller cost function and to avoid such state changes that may cause pressure peaks. Pressure peaks depend also on used coding method: PNM coding gives the smallest peaks, binary coding the highest and Fibonacci coding is something between PNM and binary coding.

6.2.4 Control Algorithms

One approach to solve the control problem of Digital Hydraulics is to use DFCUs that have very high flow resolution, for example binary coded DFCU with eight valves. Such unit can be considered as continuous and traditional control methods of hydraulic servo systems can be applied. However, good results can be achieved with fewer valves if the digital nature of the system is considered. An example of this is results presented in [23] and in Section 5 where a cost function based optimal controller is used. Although the results show that the approach works, it is difficult to prove analytically e.g. stability or robustness. These kind of on-line optimizing controllers have chaotic features (every response is different although good). There are also several conflicting objectives, such as accuracy, efficiency, pressure transients, number of valve operations etc. Therefore, more sophisticated control theories are needed to develop and analyze digital hydraulic systems with optimal performance. Some research areas are discrete optimization, statistical analysis and predictive control.

6.2.5 Availability and Suitability of Current Valves

As discussed in Section 6.2.1, current valves are not the optimal solution for Digital Hydraulics. Screw-in cartridge valves are possible solution but they are not fast enough for all cases. Fast and low-cost valve has been presented in [3], but it is not available for ordinary customers. Two-way solenoid valves are a cost-effective solution for water hydraulic systems but the problem is limited flow capacity and maximum pressure. It can be concluded that the application range of Digital Hydraulics is currently limited because of lack of suitable valves.

7 CONCLUSIONS

The idea of Digital Hydraulics is to replace the expensive and sensitive servo valve by a number of low-cost on/off valves. The basic concept is parallel connection that allows good flow control without continuous switching of valves. This means that good control results can be achieved even with slow-response valves, which reduces the price of valves and control electronics. Main advantages of Digital Hydraulics are better efficiency due to separate meter-in meter-out control and improved reliability due to more robust valves and inherent redundancy. Total costs are also smaller especially in water hydraulic applications.

The first results show that good tracking control and simultaneous pressure control are possible with Digital Hydraulics. Thus, Digital Hydraulics is a real alternative for traditional servo and proportional systems, and offers also unique benefits. However, there are some challenges to be solved, the most important being valve technology and control methods.

Is it then time for Digital Hydraulics? The technology has potential to satisfy the dream of cheaper, better and more reliable hydraulics, but research and development are needed. The trend has been from analog to digital in all fields of technology, why not also in hydraulics?

ACKNOWLEDGEMENT

The research was supported by the Academy of Finland (Grant No. 80411).

REFERENCES

1 **Lakin, D. & Turner, S.** 1996. Electrohydraulic Proportional Control Valve Assemblies. Patent GB2298291.

2 **Garstenauer, M. & Scheidl, R.** 1999. High-Speed Switching Valves Actuated by Parametrically Excited Structures. In: **Burrows, C. R. & Edge, K. A.** (Eds.) Power Transmission and Motion Control (PTMC 99), pp. 137–150 (Professional Engineering Publishing, London and Bury St Edmunds, UK).

3 **Johnson, B., Massey, S. & Sturman, O.** 2001. Sturman Digital Latching Valve. In: **Palmberg, J.-O.** (Ed.) The Seventh Scandinavian International Conference on Fluid Power, SICFP'01, pp. 299–314 (Vol. 3) (Linköping University, Linköping, Sweden).

4 **Pohl, J., Sethson, M., Krus, P. & Palmberg, J.-O.** 2002. Modelling and Validation of a Fast Switching Valve Intended for Combustion Engine Valve Trains. Proceedings of the Institution of Mechanical Engineers Part I (Journal of Systems and Control Engineering), Vol. 216, No. 2, pp. 105–116.

5 **McCloy, D.** 1972. Cavitation Effects in On-Off Controlled Hydraulic Servos. Transactions of the ASME, Journal of Dynamic Systems, Measurement, and Control, Vol. 94, No. 1, pp. 50–56.

6 **Baeck, H.** 1967. Hydraulic On-Off Servo: Simple, Rugged Positioner. 1967. Control Engineering, Vol. 14, No. 12, pp. 79–82.
7 **Linjama, M., Tammisto, J., Koskinen, K.T. & Vilenius, M.** 2000. On/off position control of low-pressure water hydraulic cylinder using low-cost valves. In: **Laneville, A.** (Ed.) Proceedings. Sixth Triennial International Symposium on Fluid Control, Measurement and Visualization, FLUCOME 2000, 6 p. (CD-ROM, Université de Sherbrooke, ISBN 2-7622-0126-8).
8 **Linjama, M., Sairiala, H., Koskinen, K. T. & Vilenius, M.** 2002. High-Speed On/Off Position Control of a Low-Pressure Water Hydraulic Cylinder Drive. SAE Technical Paper Series, SAE 2002-01-1378, NCFP I02-8.2 (SAE, Warrendale, USA).
9 **Armstrong, P. & McCloy, D.** 1971. Optimisation of Hydraulic Servo using On/Off Controllers. In: **Thornton, W., Brock, T. & Stephens, H.** (Eds.) Proceedings of the 2nd Fluid Power Symposium, pp. B4-69 – B4-84 (The British Hydromechanics Research Association, Cranfield, Bedford, England).
10 **Chubbuck, J.** 1957. Are High Performance and Low Cost Compatible in Hydraulic Servos? Control Engineering, Vol. 4, No. 3, pp. 98–103.
11 **Suematsu, Y., Yamada, H., Tsukamoto, T. & Muto, T.** 1993. Digital Control of Electrohydraulic Servo System Operated by Differential Pulse Width Modulation. JSME International Journal, Series C, Vol. 36, No. 1, pp. 61–68.
12 **Anon.** 2001. PVG32 Proportional Valve, Technical Information. Sauer-Danfoss Prochure No. 520L0344.
13 **Kato, N. & Oshima, S.** 1999. A Method of Digital Small Stepping Drive of Hydraulic Cylinder. 48th annual symposium by Tokai branch of JSME, No.993-1, pp. 183–184 (in Japanese).
14 **Linjama, M., Oshima, S., Koskinen, K.T. & Vilenius, M.** 2001. High-Precision On/Off Position Control of Low-Pressure Water Hydraulic Cylinder. In: **Palmberg, J.-O.** (Ed.) The Seventh Scandinavian International Conference on Fluid Power, SICFP'01, pp. 41–55 (Vol. 2) (Linköping University, Linköping, Sweden).
15 **Linjama, M., Koskinen, K. T. & Vilenius, M.** 2002. Adaptive On/Off Position Control of Low-Pressure Water Hydraulic Cylinder. 3rd International Fluid Power Conference (3rd IFK), pp. 303–314 (Vol. 1) (Shaker Verlag, Aachen, Germany).
16 **Laamanen, A., Nurmia, M., Linjama, M., Koskinen, K. T. & Vilenius, M.** 2003. Two Different Control Methods for Digital Flow Control Unit. Accepted for publication in the Eight Scandinavian International Conference on Fluid Power, May 7–9, Tampere, Finland.
17 **Rickenberg, F.** 1930. Valve. US Patent No. 1757059.
18 **Bower, J.** 1961. Digital Fluid Control System. US Patent No. 2999482.
19 **Murphy, R. & Weil, J.** 1962. Hydraulic Control System. US Patent No. 3038449.
20 **Virvalo, T.** 1978. Cylinder Speed Synchronization. Hydraulics & Pneumatics. Dec 1978, pp. 55–57.
21 **Liu, R., Wang, X., Tao, G. and Ding, F.** 2001. Theoretical and Experimental Study on Hydraulic Servo Position Control System with Generalization Pulse Code Modulation Control. In: **Lu, Y., Chen, Y. & Xu, L.** (Eds.) Proceedings of the Fifth International Conference on Fluid Power Transmission and Control (ICFP'2001), pp. 176–179 (International Academic Publishers, Beijing, China).
22 **Laamanen, A., Linjama, M., Tammisto, J., Koskinen, K. T. & Vilenius, M.** 2002. Velocity Control of Water Hydraulic Motor. In: **Yokota, S.** (Ed.) Proceedings

of the 5th International Symposium on Fluid Power, pp. 167–172 (The Japan Fluid Power System Society, Tokyo, Japan).

23 **Linjama. M., Koskinen, K. T. & Vilenius, M.** 2003. Accurate Trajectory Tracking Control of Water Hydraulic Cylinder with Non-Ideal On/Off Valves. Accepted for publication in the International Journal of Fluid Power.

24 **Miyata, K., Yokota, S. and Hanufusa, H.** 1991. Control of Pneumatic Drive Systems by Using PCM Valves. 3rd Triennial International Symposium on Fluid Control, Measurement, and Visualization (FLUCOME '91), pp. 373–378 (The American Society of Mechanical Engineers, NY, USA).

25 **Ferraresi, C.** 1994. A New PCM-PWM Combined Technique for Pneumatic Flow-Regulating Valves. Proceedings of the Joint Hungarian – British International Mechatronics Conference, pp. 385–390 (Computational Mechanics Publications).

26 **Anon.** General Catalogue – English Version, Code 861.101H Rev. 01 (Matrix S.p.a., Pneumatic Division).

27 **McCloy, D. & Martin, H.**1973. The Control of Fluid Power (Longman, London).

28 **Linjama, M., Tammisto, J., Koskinen, K.T. & Vilenius, M.** 2000. Two-way solenoid valves in low-pressure water hydraulics. In: **McLain, T. & Kim, D.** (Eds.) Fluid Power Systems and Technology 2000, pp. 55-60 (The American Society of Mechanical Engineers).

29 **Mäkinen, E. & Virvalo, T.** 2001. On the Motion Control of a Water Hydraulic Servo Cylinder Drive. In: **Palmberg, J.-O.** (Ed.) The Seventh Scandinavian International Conference on Fluid Power, SICFP'01, pp. 109–123 (Vol. 1) (Linköping University, Linköping, Sweden).

30 **Murrenhoff, H.** 2002. Trends in Valve Development. 3rd International Fluid Power Conference (3rd IFK), pp. 109–144 (Vol. 1) (Shaker Verlag, Aachen, Germany).

View publication stats